UNIVERSITY OF CAMBRIDGE INTERNATIONAL EXAMINATIONS
General Certificate of Education
Advanced Subsidiary Level and Advanced Level

CANDIDATE NAME	
CENTRE NUMBER	
CANDIDATE NUMBER	

9471512454

PHYSICS **9702/33**

Advanced Practical Skills 1 **October/November 2010**

2 hours

Candidates answer on the Question Paper.

Additional Materials: As listed in the Confidential Instructions.

READ THESE INSTRUCTIONS FIRST

Write your Centre number, candidate number and name on all the work you hand in.
Write in dark blue or black pen.
You may use a soft pencil for any diagrams, graphs or rough working.
Do not use staples, paper clips, highlighters, glue or correction fluid.
DO **NOT** WRITE IN ANY BARCODES.

Answer **both** questions.
You will be allowed to work with the apparatus for a maximum of one hour for each question.
You are expected to record all your observations as soon as these observations are made, and to plan the presentation of the records so that it is not necessary to make a fair copy of them.
You may lose marks if you do not show your working or if you do not use appropriate units.

Additional answer paper and graph paper should be used only if it becomes necessary to do so.
You are reminded of the need for good English and clear presentation in your answers.

At the end of the examination, fasten all your work securely together.
All questions in this paper carry equal marks.

For Examiner's Use	
1	
2	
Total	

This document consists of **10** printed pages and **2** blank pages.

© UCLES 2010

You may not need to use all of the materials provided.

For Examiner's Use

1 In this experiment, you will investigate how the motion of a pendulum bob is affected by the height of the bob above the bench.

(a) (i) Set up the apparatus as shown in Fig. 1.1.

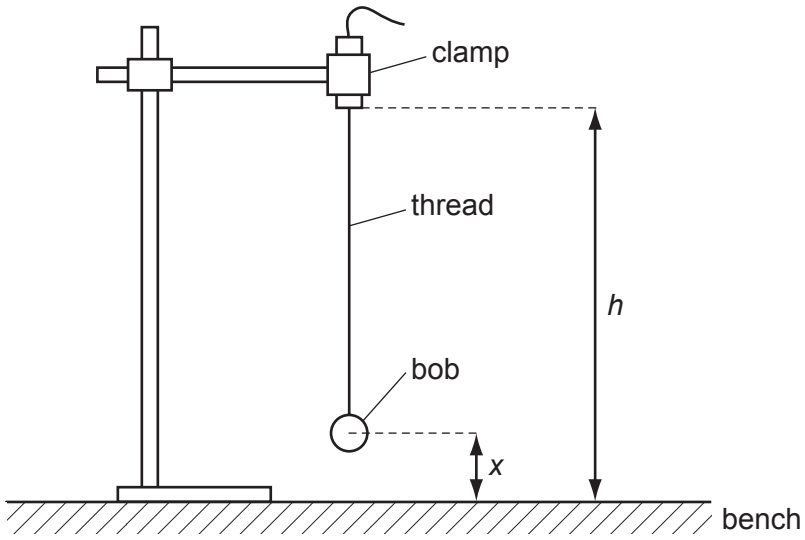

Fig. 1.1

The distance *h* from the point of suspension to the bench should be as large as possible.

The distance *x* between the centre of the bob and the bench should be approximately 5 cm.

(ii) Measure and record distance *h*.

Throughout this experiment, do not change the distance *h*.

h = ...

(iii) Measure and record distance *x*.

x = ...

For Examiner's Use

(b) Displace the bob a small distance to the left. Release the bob and watch the movement.

The time the bob takes for each complete swing, first to the right and then back to the left, as shown in Fig. 1.2, is *T*.

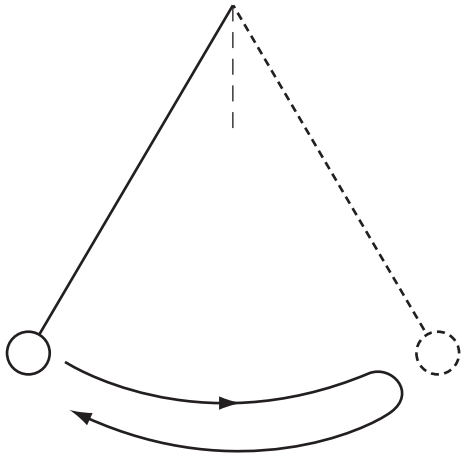

Fig. 1.2

By timing several of these complete swings, determine an accurate value of *T*.

T = ...

For Examiner's Use

(c) Keeping h constant, change x and repeat **(a)(iii)** and **(b)** until you have six sets of values for x and T. Include values for T^2 in your table of results.

(d) **(i)** Plot a graph of T^2 on the y-axis against x on the x-axis.

(ii) Draw the straight line of best fit.

(iii) Determine the gradient and y-intercept of this line of best fit.

gradient = ...

y-intercept = ...

© UCLES 2010

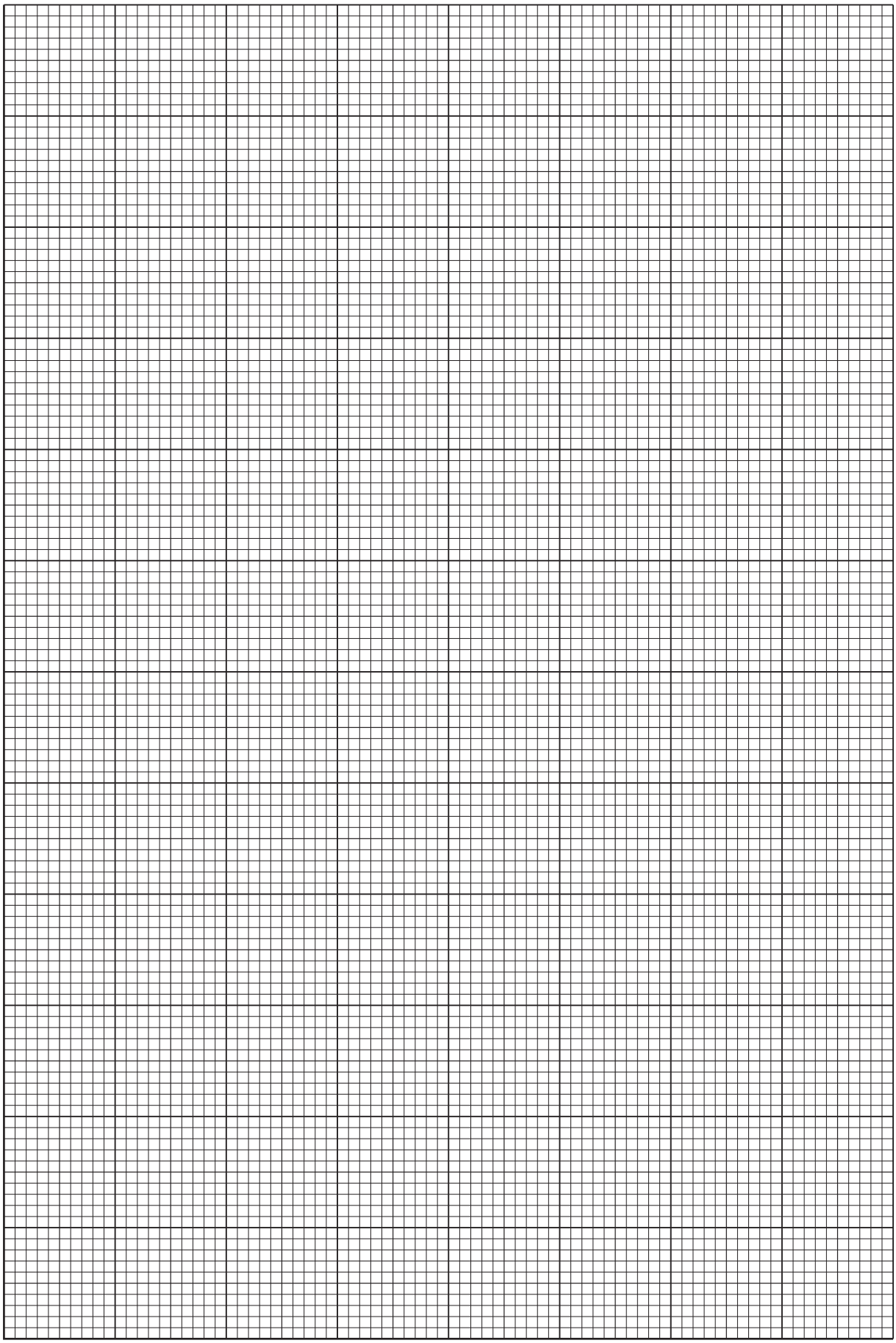

For Examiner's Use

For Examiner's Use

(e) The quantities T and x are related by the equation

$$T^2 = A - Bx$$

where A and B are constants.

Use your answers to **(d)(iii)** to determine the value of $\frac{A}{B}$.

Give an appropriate unit.

$\frac{A}{B}$ = ...

You may not need to use all of the materials provided.

For Examiner's Use

2 In this experiment, you will investigate how the potential difference across a current-carrying wire depends on its diameter.

(a) Measure and record the diameter *d* of wire A.

d = ...

(b) Connect the circuit shown in Fig. 2.1. The wire A should be connected into the circuit using crocodile clips placed close to the ends of the wire.

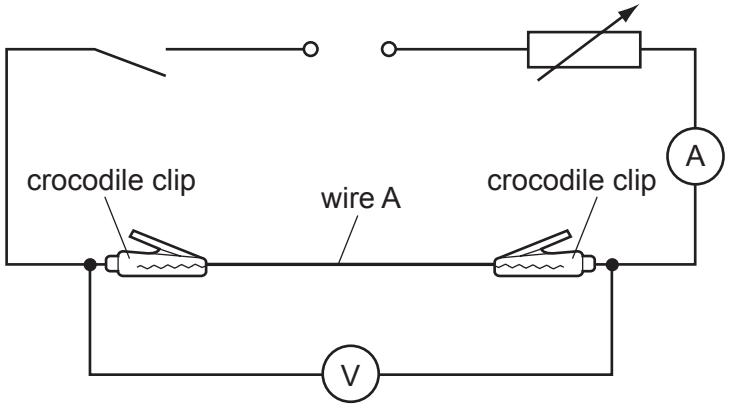

Fig. 2.1

(c) (i) Measure and record the length *L* of wire between the crocodile clips.

L = ...

(ii) Estimate the percentage uncertainty in your value of *L*.

percentage uncertainty = ...

For Examiner's Use

(d) (i) Close the switch. Adjust the variable resistor until the current is close to 90 mA. Record this current I.

I = ...

(ii) Record the voltmeter reading V and then open the switch.

V = ...

(e) Measure and record the diameter d of wire B.

d = ...

(f) (i) In the circuit, replace wire A with wire B, maintaining the same length L of wire between the crocodile clips as in **(c)(i)**.

(ii) Close the switch. Adjust I to the same value as in **(d)(i)**. Record V and then open the switch.

V = ...

(g) It is suggested that the relationship between V, L and d is

$$V = \frac{kL}{d^2}$$

where k is a constant.

(i) Using your data, calculate two values of k.

value of k for wire A = ...

value of k for wire B = ...

© UCLES 2010

For Examiner's Use

(ii) Justify the number of significant figures that you have given for your values of k.

.....

.....

.....

(iii) Explain whether your results support the suggested relationship.

.....

.....

.....

.....

.....

Question 2 continues on the next page.

For Examiner's Use

(h) (i) Describe four sources of uncertainty or limitations of the procedure in this experiment.

1. .....

.....

2. .....

.....

3. .....

.....

4. .....

(ii) Describe four improvements that could be made to this experiment. You may suggest the use of other apparatus or different procedures.

1. .....

.....

2. .....

.....

3. .....

.....

4. .....

.....

© UCLES 2010

BLANK PAGE

© UCLES 2010

BLANK PAGE

Permission to reproduce items where third-party owned material protected by copyright is included has been sought and cleared where possible. Every reasonable effort has been made by the publisher (UCLES) to trace copyright holders, but if any items requiring clearance have unwittingly been included the publisher will be pleased to make amends at the earliest possible opportunity.

University of Cambridge International Examinations is part of the Cambridge Assessment Group. Cambridge Assessment is the brand name of University of Cambridge Local Examinations Syndicate (UCLES), which is itself a department of the University of Cambridge.

© UCLES 2010